# Town of Canaan

# STEAP Grant – Assessor's Roof Project

# Request for Proposal

The Town of Canaan/Falls Village is accepting proposals for a design/build for a pitched roof over a current mostly flat roof over the Assessor's office at the Falls Village Town Hall, along with the installation of a new EDPM roof over said new roof structure. Proposals must be submitted no later than **December 22, 2026, at 12:00 PM,** reference **Bid for Assessor's Roof,** on all communications submitting your proposal. Proposal must be received by Town Clerk, Town of Canaan/Falls Village, 108 Main Street, P.O. Box 47, Falls Village, CT 06031 by the due date. This RFP will be available on **December 1, 2026, at 10:00 AM** digitally from the Town of Canaan/Falls Village website www.canaanfallsvillage.org and in paper form available at Town Hall from said Town Clerk. This will be a Sealed Public Competitive proposal.

All Proposers are required to submit a qualifying statement, for each firm making up the replacement team that will be working on the project of their experience and qualifications.

If it becomes necessary to revise any part of this RFP or otherwise provide additional information, an addendum will be issued by the Town and published on the Town of Canaan/Falls Village website www.canaanfallsvillage.org. It is the sole responsibility of the Vendor to consult the Town of Canaan/Falls Village website prior to submittal of their Proposal. Failure to acknowledge receipt of addendum in accordance with the

instructions contained in the addendum may result in the proposal not being considered.

## INTRODUCTION/BACKGROUND

The Town of Canaan/Falls Village was fortunate enough to receive a Small Town Economic Assistance Program (STEAP) Grant for replacing the Assessor's Roof, located at 108 Main St. Falls Village, CT. 06031. This work will consist of design-build and replacement EPDM roof with slight pitch to promote water run-off. The property can be accessed by appointment with the Board of Selectmen.

The project must meet all the STEAP Grant requirements. Survey of the existing conditions are available by appointment outside of the scheduled site visit date if needed. The proposed roof for replacement must follow any State Historical Preservation Office guidelines .

## GENERAL INFORMATION & RFP INSTRUCTIONS:

a.

| DATE | ACTION |
|---|---|
| 12/1/26 | Release of RFP, 10:00 AM |
| 12/7/26 | Site Visit 10:00 AM, advised |
| 12/10/26 | Questions Due by no later than 10:00 AM |
| 12/22/26 | Proposals Due by 12:00 PM |

b. Right to Amend or Terminate this Request for Proposal (this "RFP"): The Town may, in its sole discretion, clarify, modify, or terminate this RFP if the Town determines in its sole discretion, that it is in the Town's best interests. The Town reserves all rights to reject any or all proposals.

c. Questions: Any questions concerning the process and procedures applicable to this RFP's specifications/scope of work, are to be submitted in writing by email only to: FirstSelectman@canaanfallsvillage.org. Answers to questions, if appropriate, will be posted on the Town website as part of an addendum to this RFP and shall be deemed a part of this RFP. It is the sole responsibility of the Proposer to track any and all addendums issued. Each and every addendum must be acknowledged in the proposal sheet. Failure to acknowledge the addendum could cause the Town to reject the proposal.

d. Submission: Proposers should submit their proposals by mail or in-person along with email address (for confirmation) to Town Clerk, Town of Canaan/Falls Village, 108 Main St., P.O. Box 47, Falls Village, CT. 06031. This proposal is due no later than the Proposal date shown in the chart in General Information by 12:00 PM. The Town Clerk will confirm by email receipt with the Proposer. Proposals received after the final submission date and time will not be considered by the Town. The attached Proposal Sheet must be submitted as part of the proposal, along with the Hold Harmless Agreement, and the Non-Collusion Certificate.

e. PROPOSERS are prohibited from contacting any Town employee, officer or official concerning this RFP except for the First Selectman at FirstSelectman@canaanfallsvillage.org or their designated agent. A

PROPOSER's failure to comply with this requirement may result in disqualification. No oral statements by any Town representatives shall be effective to waive, change, or modify any of the provisions of this RFP.

f. The Town of Canaan does not discriminate on the basis of sex, race, age, physical disability, religion or national origin. The Town of Canaan is an "Affirmative Action/Equal Opportunity Employer. Minority/Women's Business Enterprises are encouraged to apply. This contract is subject to state spending allocation goals and contract compliance requirements."

**PROPOSAL REQUIREMENTS:**

In addition to the proposal sheet, all proposals submitted in response to this RFP shall include the following information and documents, be clear and unambiguous, and be presented in the following manner:

a. The company/companies' qualifications. The proposer, their sub-contractors and any sub-consultants must submit a brief description of their company history including any current or past litigation or any affiliates involved. The company should list at least 3 completed significant projects to date in New England (identifying the state) and what role it played with respect to each project. Highlighting experience on past projects with similar scope is preferred. An attached Reference Sheet is provided as part of this RFP.

b. Project References: The company must provide the names (individuals), addresses, and contact information for three (3) references related to this project. An attached Reference Sheet is provided as part of this RFP.

c. If the company takes specific exceptions to any portion of this RFP, it shall be fully noted.

d. Presumption of Proposer's Full Knowledge: Each proposer is responsible for having read and understood each document in this RFP and any addenda issued by the Town or formal responses, if any, to questions posed by other proposers. A proposer's failure to have reviewed all information that is part of or applicable to this RFP shall in no way relieve it from any aspect of its proposal or the obligations related thereto. Each Proposer is deemed to be familiar with and is required to comply with all local, federal and state statutes, regulations, ordinances, codes and orders. By submitting a proposal, each company represents that it has thoroughly examined and become familiar with the scope of work outlined in this RFP and can perform the work to achieve the Town's objectives. In addition, the Proposer by submitting the proposal represents the fact that they are familiar with all Department of Economic and Community Development (DECD) and Commission on Human Resources and Opportunities (CHRO) requirements and will comply with all of them.

**MISCELLANEOUS:**

a. Cost for Preparing and Ownership of Proposals: The costs incurred by the Proposers in developing their proposals are their sole responsibility,

and the Town shall not have any liability for such costs. All proposals submitted shall become the Town's property and will not be returned.

b. Freedom of Information Act/Confidentiality: All information submitted in a proposal or in response to a request for additional information is subject to disclosure under the state Freedom of Information Act as amended and judicially interpreted. All information submitted by Proposer in response to this RFP will not be treated as or considered confidential by the Town.

c. Hold Harmless Agreement: Each Proposer shall submit a completed Hold Harmless Agreement that is attached to this RFP.

d. Non-Collusion Certificate: Each Proposer shall submit a completed Non-Collusion Certificate that is attached to this RFP.

e. Interpretation: Interpretation of the wording of this document shall be the sole right and responsibility of the Town, and that interpretation shall be final.

f. Non-discrimination in Employment: Proposers on this work will be required to comply with the President's Executive Order No. 11246. The Town is an affirmative action and equal opportunity employer. Minority/Women's Business Enterprises are encouraged to apply,

g. Conflict of Interest/Code of Ethics: The Winning Proposer agrees that this RFP and the actions of the Proposer are subject to the provisions of

the Town Code of Ethics. Should the Winning Proposer be found to have violated the Code of Ethics, the Town may terminate this RFP or any ensuing agreement such as the letter of intent or notice of award and take such actions as the Town may have at law or equity. The Winning Proposer shall incorporate the above paragraphs into any sub-contracts or purchase orders. The Winning Proposer shall be responsible for disclosing interests and relationships that could be perceived as a possible conflict of interest under the Town Code of Ethics.

**AWARD CRITERIA & SELECTION**

a. Proposal Opening and Review: All Proposals will be sealed and opened by David Barger, First Selectman, and analyzed by the Board of Selectmen to select the winning proposer. David Barger will execute a letter of intent to award that will be conditioned on approval by the State to allow the Town to make the final award.

b. Proposal Selection: The Town will select the proposal that, all things considered, the Town determines in its complete and sole discretion, is in the best interest of the Town. Although price will be an important factor, it will not be the only basis for an award. Further, the Town can, at its discretion, reject all proposals.

The Town could use the following criteria, among others, in evaluating proposals.

i. Proposal completeness and compliance with the RFP's requirements

ii. The company's relevant experience and industry reputation.

iii. The company's familiarity with the Town's and DECD policies, procedures, and requirements.

iv. References provided on similar projects.

v. Price for performing the work.

vi. Understanding of the goals of the project and limitations of the project financials.

vii. Any other factor that the Town deems appropriate in its sole discretion.

Regardless of anything to the contrary stated herein, the Town reserves the right to select a Proposer based on factors not enumerated above at its unfettered and sole discretion.

c. Proposal Disqualification: The Town will not select any proposal if it is in arrears or in default to the Town regarding any tax, debt, contract, security or any other obligation, nor shall it select any Proposer if a majority owner thereof is in such arrears or default.

d. Preliminary Award: The Town will select the proposal that it deems to be in the Town's best interests. David Barger, First Selectman, will execute a letter of intent to award that will be conditioned on approval by DECD to make final award. The making of a preliminary award to the winning proposer does not provide the Proposer with any rights and does not impose upon the Town any obligations. The Town is free to withdraw a preliminary award at any time and for any reason. Neither this RFP nor any actions taken by the Town shall create any obligation toward any Proposer until Final Award and Notice to Proceed is issued.

## PRICE PROPOSAL FORMAT

The proposer is required to provide a lump sum fee proposal to include all the tasks required to fully meet all the project requirements and scope of the project. This includes the cost for all sub-contractors required to do the same.

Provide a lump sum price for all tasks within the scope document below, broken down by tasks including all sub-contractors' efforts. The total lump sum fee will include all tasks added for a summation of the entire project fee. Fee must include all costs for travel and other direct costs.

## TERMINATION OF CONTRACT

Any contract entered into by the Town and the successful bidder shall provide that the Town may terminate the contract upon thirty (30) days written notice to the bidder for convenience.

## LIQUIDATED DAMAGES

Contractor shall provide an anticipated construction duration period (of days) within the bid package.

As a prerequisite to executing a contract with the Contractor, the Town of Canaan/Falls Village and Contractor shall agree on the substantial completion date in accordance with the plans, project manual, and other contract documents, taking into consideration average weather conditions, availability of labor and delivery of materials and equipment.

If the Contractor neglects, fails or refuses to achieve substantial completion of work by the substantial completion date in the executed construction contract, and such delay is not otherwise excused under this contract, then the Contractor shall agree to pay the Owner a liquidated damage for breach of contract for each and every calendar day that the Contractor shall be in default of the project work, at the rate of $500 per day.

## INSURANCE REQUIREMENTS

The Proposer shall take out and maintain, during the life of the project, adequate Workmen's Compensation Insurance for all his/her employees. If employees engaged in hazardous work under the contract at the site not protected under the Workmen's Compensation statute, the contractor shall provide Workmen's Compensation Insurance for the protection of his/her employees not protected otherwise. The Proposer agrees to furnish insurance coverage for liability, property damage and medical coverage in the following minimum amounts:

- Commercial General Liability - $1M, per occurrence
- General Aggregate - $2M
- Umbrella Liability - $1M

Policies under this section shall be issued by companies accredited by the Insurance Commission of the State of Connecticut and shall save the Town of Canaan, the State of CT and its employees, both collectively and individually, harmless from any claim resulting from personal injuries or property damage caused by Contractor, his agents, servants, and employees. The Proposer must submit to the Board of Selectmen evidence of such insurance coverage in advance of the beginning of start date of this project; said insurance shall name the Town of Canaan, The State of CT and its agents, servants, and employees as the party insured. The Proposer must have a valid State of CT license and be registered with the State of Connecticut as required. The Proposer shall be responsible for complying with any applicable federal, state and local laws, codes and regulations concerning any or all services covered by this RFP.

**Scope of Services**

Design/build from architect renderings to introduce a pitch design over the existing mostly flat roof over the assessor office. Remove existing roofing membrane to bare sheathing and replace any delaminated/damaged existing sheathing as needed. Install .060 EPDM Rubber Roof over newly installed pitched structure and new sheathings, making sure to flash and waterproof to any connection to existing building.

# RFP EXCEPTIONS by PROPOSER

| page # | Paragraph # | Item Description & Alternate Proposal |
|---|---|---|

# HOLD HARMLESS

_____(Proposer) hereby agrees that it will indemnify and save harmless the Town of Canaan and the State of CT and its employees, principals, members, agents, and subcontractors from and against all losses from claims, demands, payments, suits, actions, recoveries, and judgements of every nature and description brought or recovered against the Town of Canaan and/or State of CT by reason of any omission or act of the Proposer, its agents, employees, subcontractors in connection with this Request for Proposals and that any materials submitted herewith, to the extent permissible by law. This indemnification shall include all costs and disbursements incurred by the Town of Canaan and the State of CT in defending any suit, including attorneys' fees. Furthermore, at the option of the Town of Canaan and the State of CT, the Proposer shall provide defense for and defend all claims, demands and causes of action referred to above, and bear all other costs and expenses related thereto.

Company Name:_____

Signature:_____

By:_____

Its:_____

*The signatory must be an authorized representative of the Proposer's Firm with full power and authority to execute this Form.

# REFERENCES

List below at least five (3) references for similar projects, including all information requested. **THIS PAGE MUST BE COMPLETED.** The design firm and sub-consultants must submit references separately if not the same corporation.

1) **Client:**_____

Project Address:_____

Project Description:

_____

_____

_____

_____

Approximate $ Value:_____ Date Started: _____ Completed:_____

Contact Name:_____ Telephone #:_____

2) **Client:**_____

Project Address:_____

Project Description:

_____

_____

_____

_____

Approximate $ Value:_____ Date Started: _____ Completed:_____

Contact Name: _____ Telephone #: _____

3) **Client:**_____

Project Address:_____

Project Description:

_____

_____

_____

_____

Approximate $ Value:_____ Date Started:_____Completed:_____

Contact Name:_____Telephone #: _____

**Proposer Contact Name: _____**

**Bid Title:**_____

**Company:**_____

**Bid :**_____

**Street**_____

**City:**_____

**State, Zip:**_____

**Telephone:**_____

# NON-COLLUSION AFFIDAVIT

STATE OF_____COUNTY OF_____

I,_____being first duly sworn, deposes and says that:

1. I am_____of_____, the proposer

that has submitted the attached request for bid for_____;

2. I am fully informed respecting the preparation and contents of the attached bid and of all pertinent circumstances respecting such bid;
3. Such proposal is genuine and is not a collusive or sham bid;
4. Neither the bidder nor any of its officers, partners, owners, agents, representatives, employees or parties of interest, including this affiant, has in any way colluded, conspired, connived or agreed directly or indirectly with any other bidder, firm or person to submit a collusive or sham bid in connection with the work for which the attached bid has been submitted nor has it in any manner, directly or indirectly, sought by agreement or collusion or communication or conference with any other bidder, firm or person to fix the price or prices in the attached bid or of any other proposer, or to fix any overhead, profit or cost element of the bid price or the price of any proposal, or to secure through any collusion, conspiracy, connivance or unlawful agreement any advantage against the Town of New Fairfield or any person interested in the proposed RFP;
5. The price or prices quoted in the attached proposal are fair and proper and are not tainted by any collusion, conspiracy, connivance or unlawful agreement on the part of the bidder or any of its agents, representatives, owners, employees, or parties in interest, including this affiant.

Signed_____

Title_____

Subscribed and sworn to before this

day of 20 .

_____

_____

My commission expires_____.

# Town of Canaan/Falls Village

## STEAP Grant – Assessor's Roof Project

## Proposal Sheet

**The fee proposal shall include all costs associated with each task, any other consultant fees, all direct expenses, plus it must account for all design services needed to meet all the requirements of the attached scope of work**

Company Name:_____

Responding Corporate Officer:_____

Title:_____

Signature:_____

Date:_____

### I. REVIEW GRANT PAPERWORK

Task Total Fee:_____

### II. DESIGN DEVELOPMENT INCLUDING CONSTRUCTION DOCUMENTS, PERMITS AND CONSTRUCTION ESTIMATES

1. Design-build Unit Task Total Fee:_____

2. Removal of Existing Roof to Sheathing Unit

   Task Total Fee:_____

3. Replacement of Damaged Sheathing Unit

   Task Total Fee:_____

4. Install of .060 EPDM Rubber Roof, Flashing, Waterproofing Over Design-build Pitched Structure Unit

   Task Total Fee:_____

5. Task Training Customer

Task Total Fee:_____

III. **CONSTRUCTION ADMINISTRATION (IF NEEDED)**

Task Total Fee:_____

## Total Fee for I., ll., and III.:

Proposal:_____

Written:_____

PROJECT INFORMATION

FALLS VILLAGE TOWN HALL
168 MAIN ST
FALLS VILLAGE, CT 06031

SCOPE: INSTALLATION OF NEW EPDM ROOF ON BUILDING VOLUME WITH EXISTING FLAT ROOF. NEW ROOF NOT VISIBLE FROM STREET.

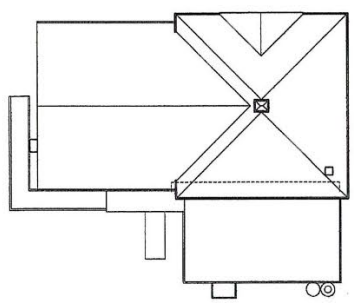

D7 PLAN – EXISTING
3/32"=1'-0"



B7 ELEVATION – NORTH EXISTING
3/32"=1'-0"

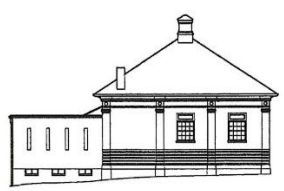

A7 ELEVATION – WEST EXISTING
3/32"=1'-0"

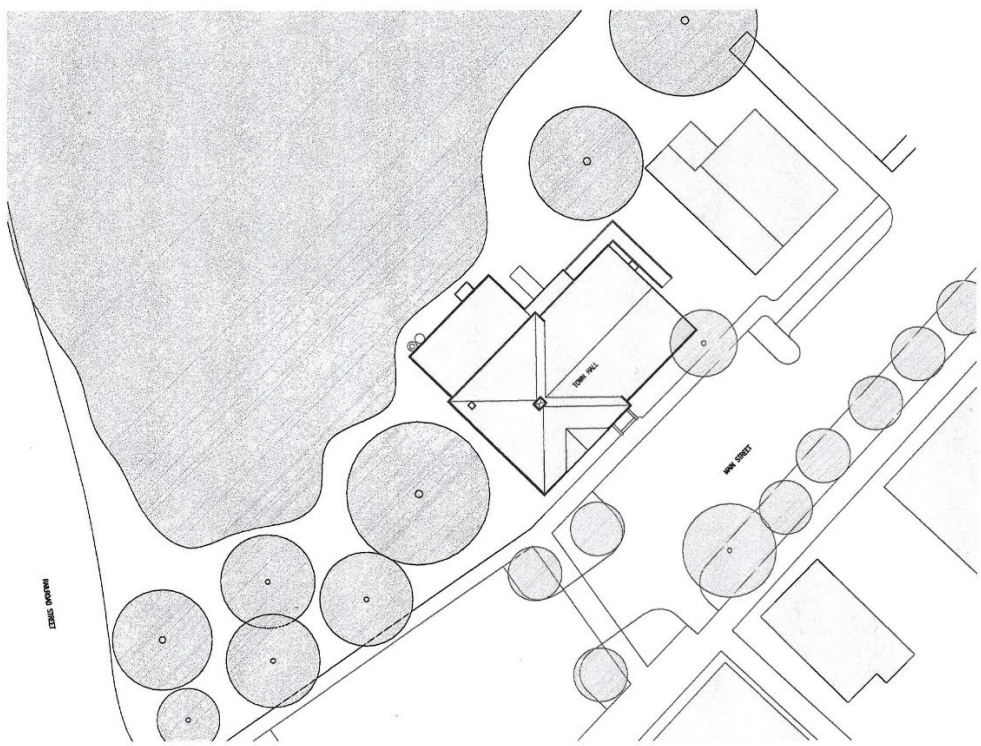


B5 PLAN – SITE
1/16"=1'-0"

| # | DATE | DESCRIPTION | CHK |
|---|---|---|---|
| 0 | 2026.06.08 | FOR REVIEW | |
| 1 | 2026.07.11 | DIMENSIONING UPDATE | |

FALLS VILLAGE TOWN HALL
168 MAIN STREET
FALLS VILLAGE, CT 06031

EXISTING CONDITIONS

A-001

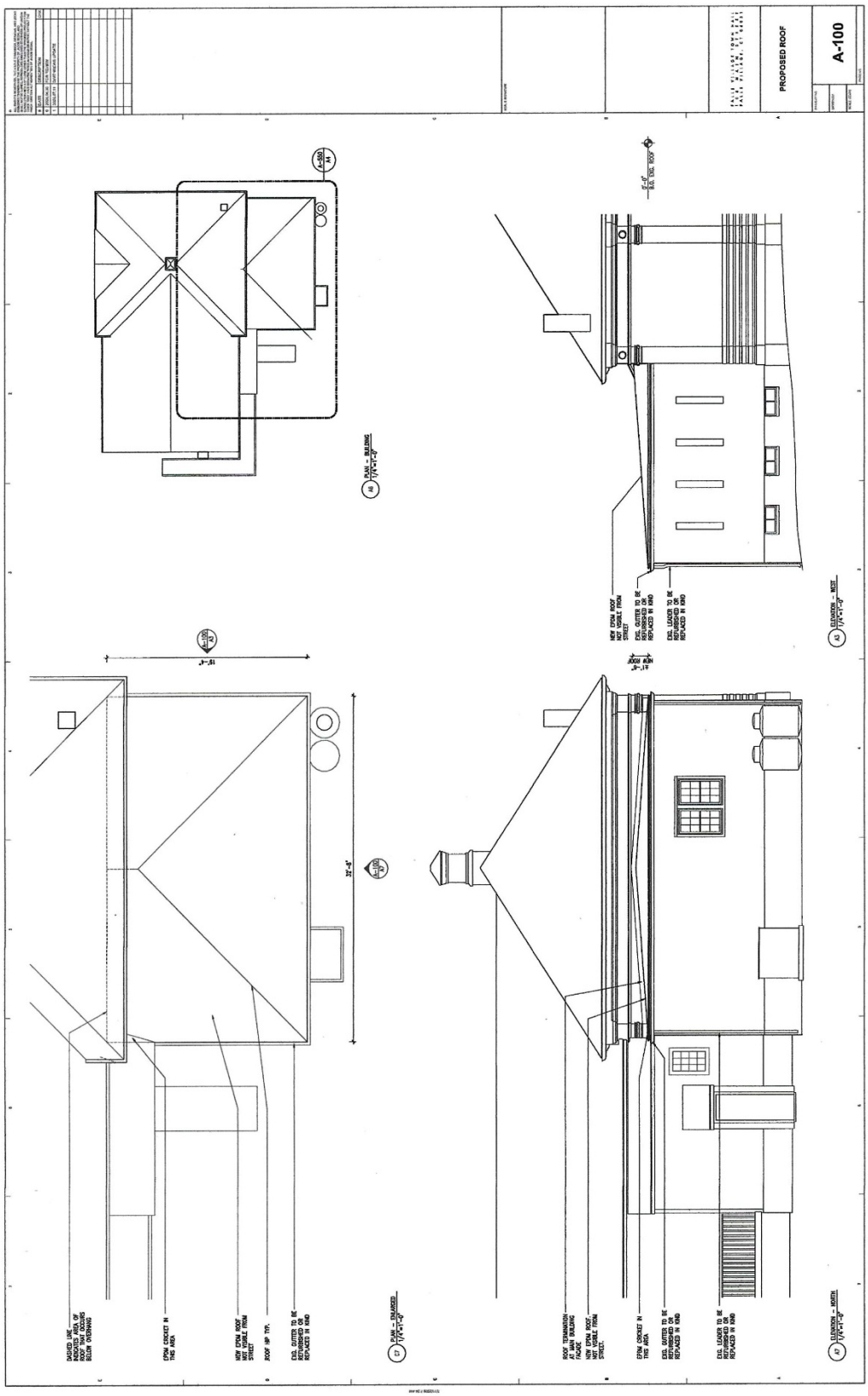
PROPOSED ROOF
A-100
PLAN - BUILDING
ELEVATION - WEST
ELEVATION - NORTH
PLAN - ENLARGED
32'-8"
18'-4"











